MULTIVIBRATORI

Astabili

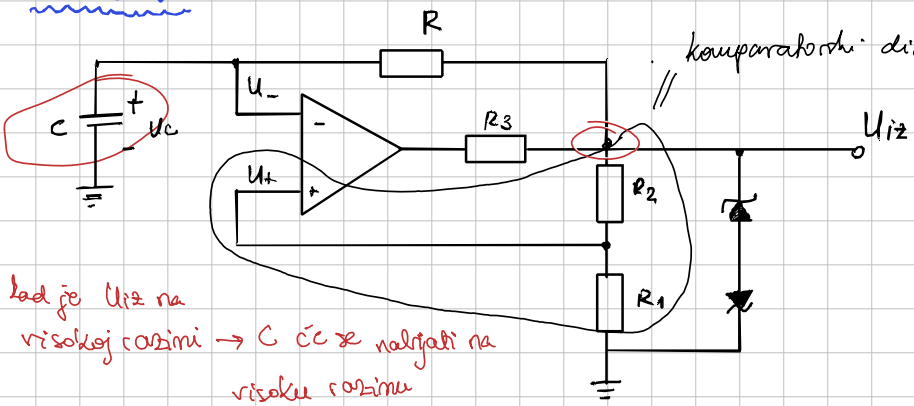

komparatorski dio → u srcu astabila

kad je U_{iz} na visokoj razini → C ćc se nabijati na visoku razinu i obrnuto

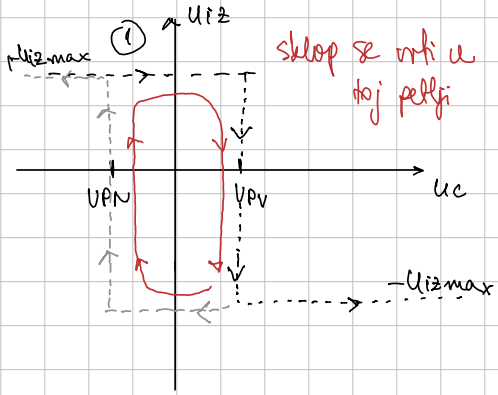

sklop se vrti u toj petlji

U_{PV} - napon okidanja na visokoj razini

U_{PN} - napon okidanja na niskoj razini

(1) $U_{iz} = +U_{izmax}$, $U_+ = +\beta \cdot U_{izmax} = U_{PV}$

$U_C \xrightarrow{\text{nabija se}} +U_{izmax}$

$U_{C\,poč} = U_{PN}$

$U_C(t_1) \geq U_{PV} \Rightarrow$ promjena $U_{iz} = -U_{izmax}$

(2) $U_{iz} = -U_{izmax}$, $U_+ = -\beta \cdot U_{izmax} = U_{PN}$

$U_{C\,poč} = U_{PV}$ (napon koji smo dosegli prije promjene)

$U_C \longrightarrow -U_{izmax}$

$U_C(t_2) < U_{PN} \rightarrow$ promjena $U_{iz} = +U_{izmax}$

i opet u krug

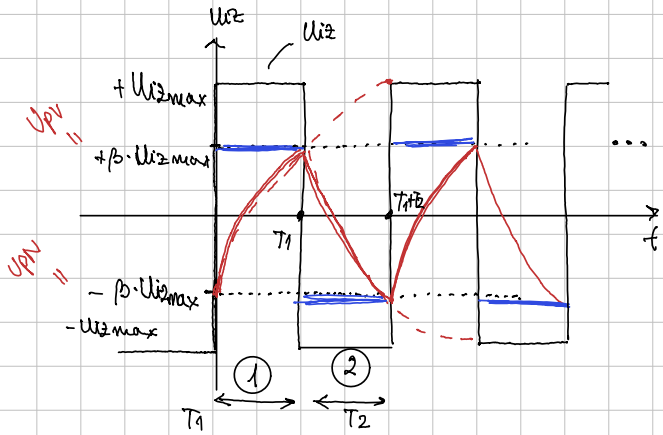

— $U_C = U_-$

— U_+

1.

$0 \le t \le T_1$

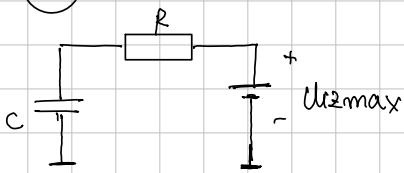

$U_{c\,poč} = U_{PN}$

$U_{c\,kon}$ = ono što je određeno tom mrežom; kon. vrijednost na kojoj se nalazi

$U_{c\,kon} = +U_{iz\,max}$

$$U_c(t) = U_{cp} + [U_{ck} - U_{cp}]\left\{1 - \exp\frac{t}{\tau}\right\}$$

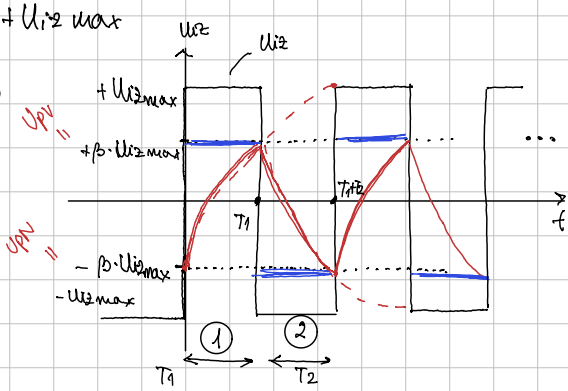

$$U_c(t) = U_{PN} + [+U_{izmax} - U_{PN}]\left\{1 - \exp\frac{-t}{\tau}\right\}$$

$$U_c(T_1) = U_{PN} + [+U_{izmax} - U_{PN}]\left\{1 - \exp\frac{-T_1}{\tau}\right\}$$

$$= U_{PV}$$

$$\Rightarrow T_1 = \tau \ln\left(\frac{U_{izmax} - U_{PN}}{U_{izmax} - U_{PV}}\right) = \tau \ln\left(\frac{1+\beta}{1-\beta}\right) \cdots \Rightarrow \underline{T_1 = \tau \ln\left(1 + \frac{2R_1}{R_2}\right)}$$

$U_{PN} = -\beta \cdot U_{izmax}$

$U_{PV} = +\beta\, U_{izmax}$

2.

$T_1 \le t \le T_1 + T_2$

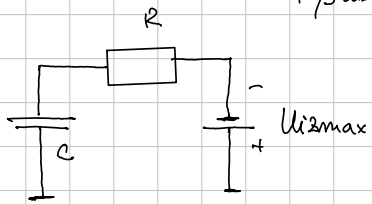

$U_{c\,poč} = U_{PV}$

$U_{c\,kon} = -U_{izmax}$

$$U_c(t) = U_{PV} + [-U_{izmax} - U_{PV}]\left\{1 - \exp\frac{-(t-T_1)}{\tau}\right\}$$

$$t = T_1 + T_2 \Rightarrow U_c(T_1+T_2) = U_{PV} + [-U_{izmax} - U_{PV}]\left\{1 - \exp\frac{-T_2}{\tau}\right\} = U_{PN}$$

$$\Rightarrow T_2 = \tau \ln\left(\frac{U_{izmax} + U_{PV}}{U_{izmax} + U_{PN}}\right) = \cdots \boxed{T_2 = \tau \ln\left(\frac{1+\beta}{1-\beta}\right) = T_1}$$

Primjer 10.7.) Astabil

$R = 10\,k\Omega \qquad C = 1\,nF$

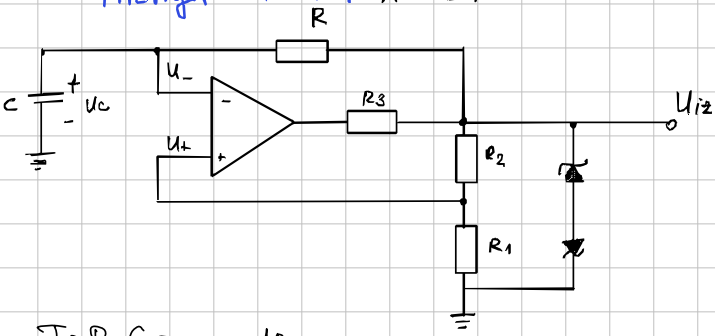

$\frac{R_1}{R_2} = ?$

$f_{izl} = 20\,kHz$

$\tau = R \cdot C = \dots = 10\,\mu s$

$f = \frac{1}{T} = \frac{1}{T_1 + T_2}$ → jedan period oscilacije je zbroj trajanja visoke i niske razine

$T_1 = T_2 \rightarrow \frac{1}{2T_1}$

$f = \frac{1}{2\tau \ln\left(1 + \frac{2R_1}{R_2}\right)}$ — taj omjer nas se traži

$\Rightarrow \frac{R_1}{R_2} = \frac{2}{\exp\left(\frac{1}{2\tau f}\right) - 1} = 0.179$

Monostabili

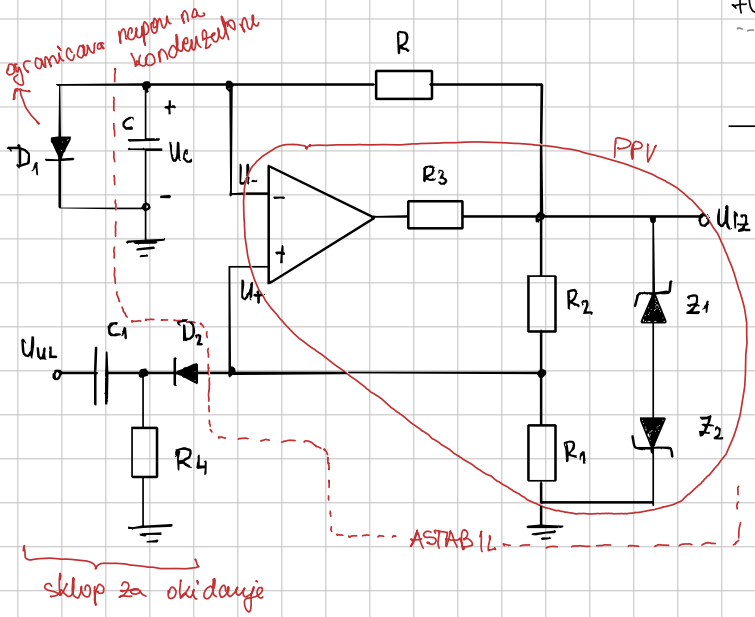

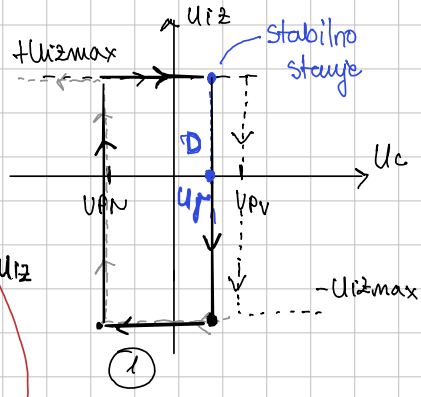

1. $U_{iz} = -U_{izmax}$ $\quad U_+ = -\beta \cdot U_{izmax} = U_{PN}$

$U_c \rightarrow -U_{izmax}$

$U_{cp} = U_\gamma$

$U_c(t_1) < U_{PN}$

2. $U_{iz} = +U_{izmax}$

$U_c \rightarrow +U_{izmax}$

$U_{cp} = U_{PN}$

$U_c(t_2) = U_\gamma$ (ograniči ga dioda)

ako $\underset{U_-}{U_\gamma} < \underset{U_+}{U_{PV}} \rightarrow \boxed{U_{iz} = +U_{izmax}}$ stabilno stanje

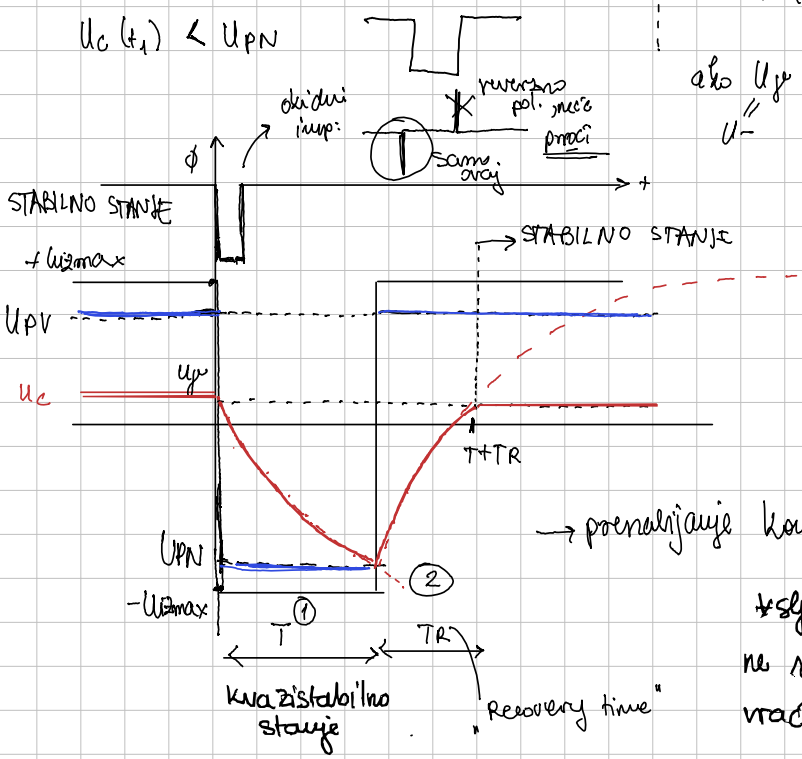

→ poremećaj kod u stabilno stanje

sljedeći okidni impuls ne smije se pojaviti prije vraćanja u stabilno stanje

analitički izračun T i TR (21:00)

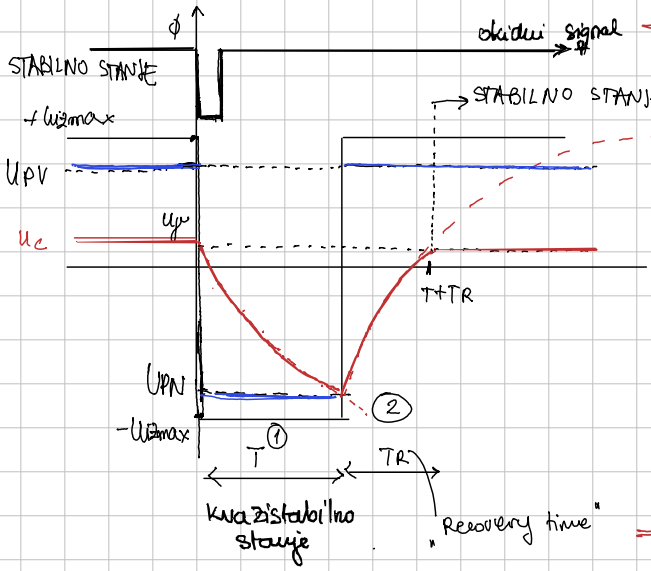

okidni signal → sklop okidamo okidnim sklopom

izlaz u visokoj raz.

//

▸ sklop u svom stabilnom stanju dok god mi ne dovedemo izvan

↳ to stabilno stanje osiguramo dodavanjem diode D_1

odvodimo prag okidanja za visoku razinu > U_γ!

$\Rightarrow U_+ > U_\gamma$ → izlaz se drži visok

1. $\emptyset \le t \le T$

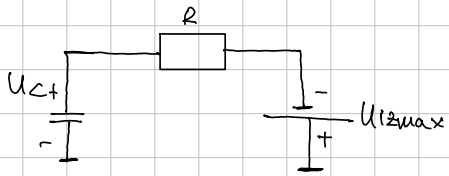

$$u_c(t) = u_{cp} + [u_{ck} - u_{cp}]\left\{1 - \exp\frac{-t}{\tau}\right\}$$

$$u_c(t) = u_\gamma + [-U_{izmax} - u_\gamma]\left\{1 - \exp\frac{-t}{\tau}\right\}$$

$u_{cp} = u_\gamma$

$u_{ck} = -U_{izmax}$

u trenutku $t = T$

$u_c(t)$ = prag okidanja komparatora = U_{PN}

$$u_c(T) = U_{PN} = u_\gamma + [-U_{izmax} - u_\gamma]\left\{1 - \exp\frac{-T}{\tau}\right\}$$

$$\Rightarrow T = \tau \ln\left(\frac{U_{izmax} + u_\gamma}{\underbrace{U_{izmax} + U_{PN}}_{= -\beta U_{izmax}}}\right) \Rightarrow \boxed{T = \tau \ln\left(\frac{1 + \frac{u_\gamma}{U_{izmax}}}{1 - \beta}\right)}$$

2 $T \le t \le T + T_R$ računanje vremena oporavka

pomak u vremenu

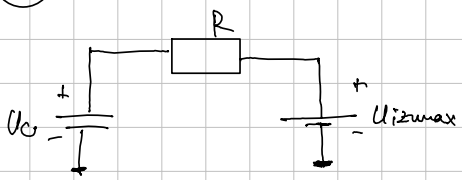

$$u_c(t) = U_{PN} + [+U_{izmax} - U_{PN}]\left\{1 - \exp\frac{-(t - T)}{\tau}\right\}$$

$t = T + T_R$

$u_{cp} = U_{PN}$

$u_{ck} = +U_{izmax}$

$$u_c(t = T + T_R) = u_\gamma = U_{PN} + [+U_{izmax} - U_{PN}]\left\{1 - \exp\frac{-T_R}{\tau}\right\}$$

$$\Rightarrow T_R = \tau \ln\left(\frac{U_{izmax} - U_{PN}}{U_{izmax} - u_\gamma}\right) \dots \Rightarrow \boxed{T_R = \tau \ln\left(\frac{1 + \beta}{1 - \frac{u_\gamma}{U_{izmax}}}\right)}$$

Primjer 10.8) monostabil

$U_{iz} = 5V$, $U_{D_1} = 0{,}7\,V$, $R_1 = 22\,k\Omega$, $R_2 = 18\,k\Omega$ $R = 11\,k\Omega$ $C = 2\,nF$

$\underbrace{\text{Trajanje kvazistabilnog stanja}}_{T}$ i $\underbrace{\text{min. vrijeme izmedu okidnih imp}}_{T+T_R}$?

$\tau = R \cdot C = \dots = 22\,\mu s$

$$T = \tau \ln\left(\frac{1 + \frac{U_P}{U_{izmax}}}{1 - \beta}\right), \quad T_R = \tau \ln\left(\frac{1+\beta}{1 - \frac{U_P}{U_{izmax}}}\right)$$

* ograničili smo U_{iz} sa Zener diodama → moramo imati Z čiji je $U_P = 4.3V$ da bi dobili ograničenje $U_{iz} = \pm 5V$

$U_{izmax} = 5V$, $\beta = \frac{R_1}{R_1 + R_2} = 0.55$

$T = \dots = 20.4\,\mu s$

$$T_R = 22 \times 10^{-6} \cdot \ln\left(\frac{1 + 0{,}55}{1 - \frac{0.2}{5}}\right) = \dots = \underline{13\,\mu s} \rightarrow T + T_R = 33{,}4\,\mu s$$

spremam na novi impuls nakon $33{,}4\,\mu s$